SAMSUNG CONFIDENTIAL
THIS DOCUMENT CONTAINS CONFIDENTIAL
PROPRIETARY INFORMATION THAT IS
SAMSUNG ELECTRONICS CO'S PROPERTY.
DO NOT DISCLOSE TO OR DUPLICATE FOR OTHERS
EXCEPT AS AUTHORIZED BY SAMSUNG.

# SM-M135F (NACHO)_REV0.4

**2022.05.03**

**sheet01 : GSM / WCDMA / LTE RF**
**sheet02 : TRANCEIVER, DRX**
**sheet03 : SENSORS, NFC, CONNECTIVITY**
**sheet04 : NACHO**
**sheet05 : PMIC, CHARGER, KEY, MOTOR, eMCP, SD/SIM**
**sheet06 : AUDIO, DISPLAY, SUB FPCB CON**
**sheet07 : CAMERA**

SAMSUNG CONFIDENTIAL
THIS DOCUMENT CONTAINS CONFIDENTIAL PROPRIETARY INFORMATION THAT IS SAMSUNG ELECTRONICS CO'S PROPERTY. DO NOT DISCLOSE TO OR DUPLICATE FOR OTHERS EXCEPT AS AUTHORIZED BY SAMSUNG.

| | CIS/EUR/MEA/SEA/SWA/CHN | LA |
|---|---|---|
| FDD | 1/ 3/ 5/ 7/ 8/ 20/ 28 | 1/ 2/ 3/ 4/ 5/ 7/ 8/ 12/ 17/ 26/ 28/ 66 |
| TDD | 38/ 40/ 41 | 38/ 40/ 41 |
| 3G | 1/ 5/ 8 | 1/ 2/ 4/ 5/ 8 |
| 2G | 850/ 900/ 1800/ 1900 | 850/ 900/ 1800/ 1900 |

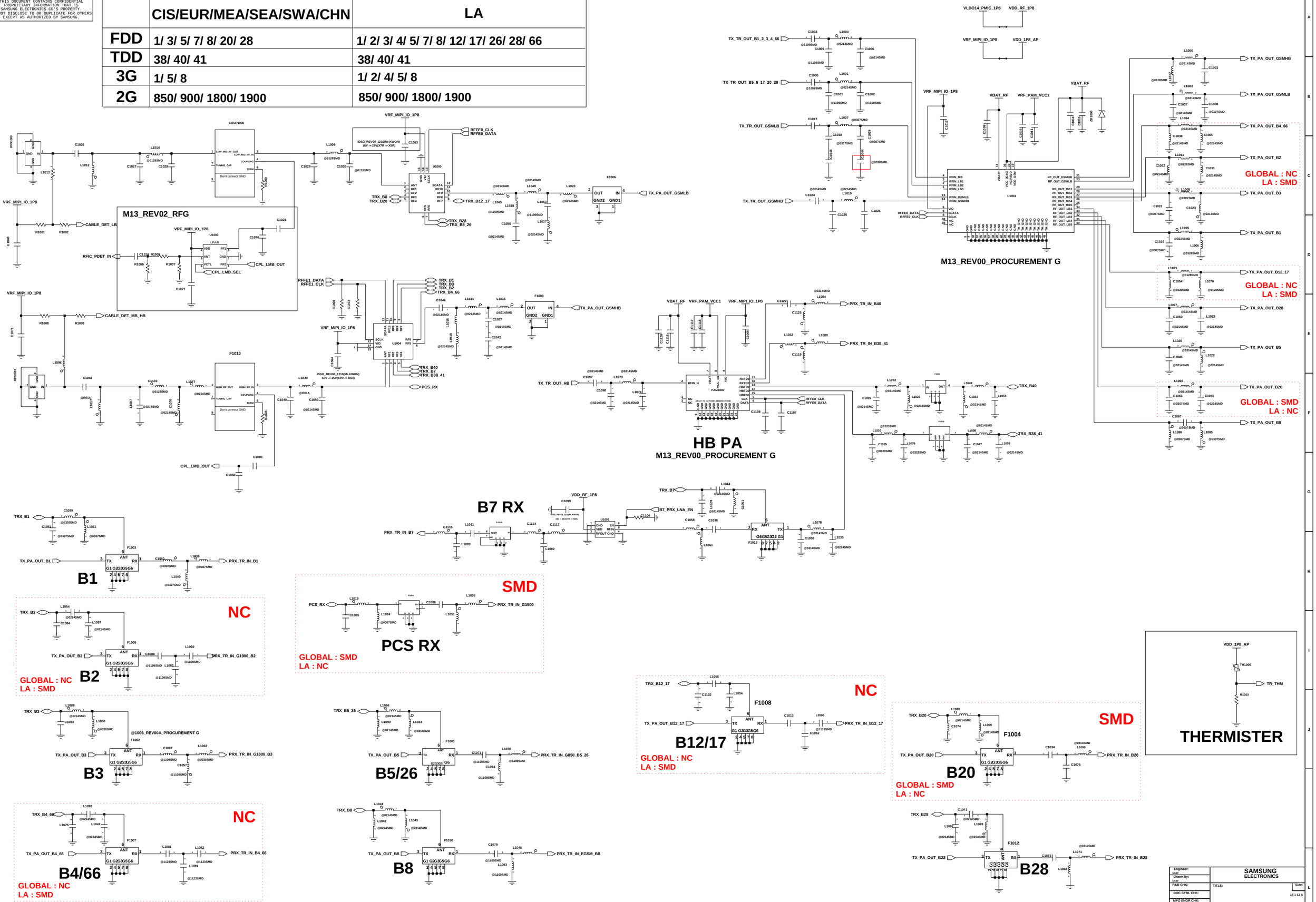


| | |
|---|---|
| Engineer: user | SAMSUNG ELECTRONICS |
| Drawn by: user | |
| R&D CHK: | TITLE: |
| DOC CTRL CHK: | Size: 16 1 12 A |
| MFG ENGR CHK: | |
| QA CHK: | REV: Drawing Number: Page: 1 |

Changed by: user | Date Changed: Monday, April 23, 2018 | Time Changed: 8:49:04 pm

SAMSUNG CONFIDENTIAL
THIS DOCUMENT CONTAINS CONFIDENTIAL
PROPRIETARY INFORMATION THAT IS
SAMSUNG ELECTRONICS CO'S PROPERTY.
DO NOT DISCLOSE TO OR DUPLICATE FOR OTHERS
EXCEPT AS AUTHORIZED BY SAMSUNG.

# DRX

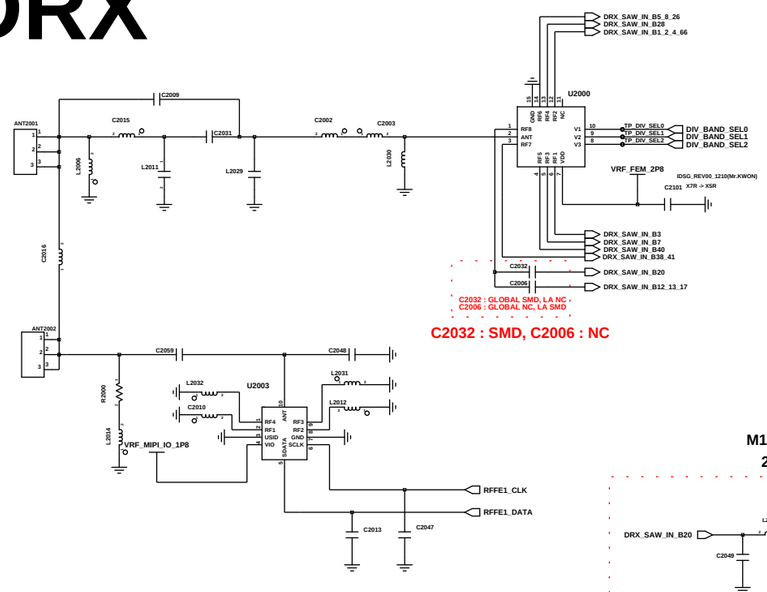


# APT MODULATOR

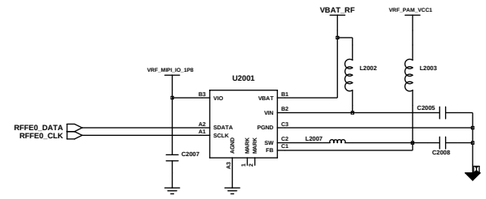


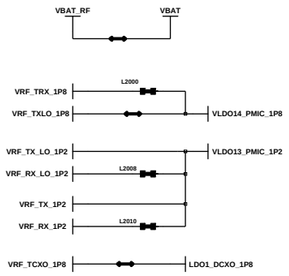


M13 LTE - HE non standard change
2904-002280 => 2904-002252

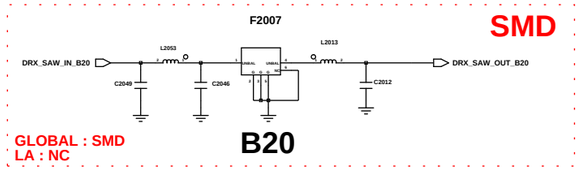


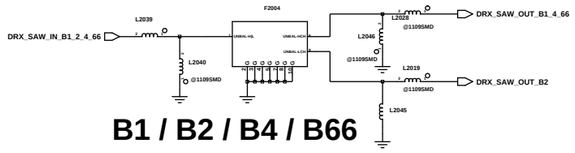


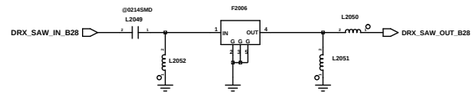


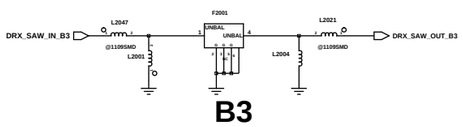


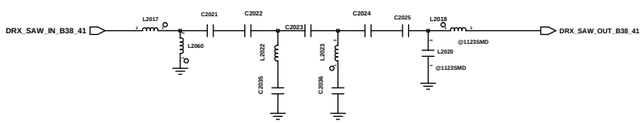


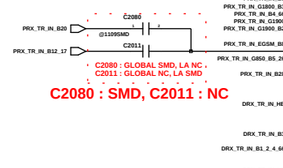


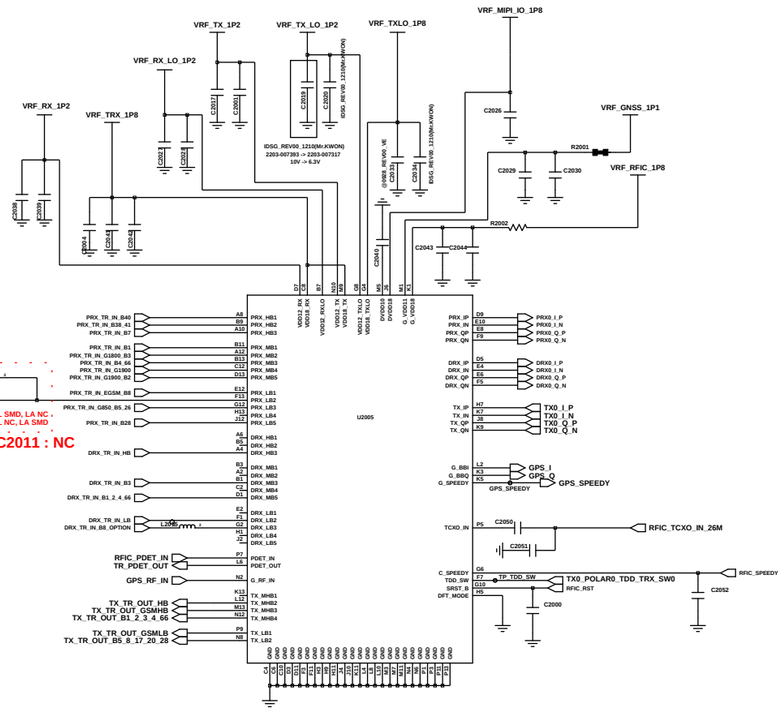


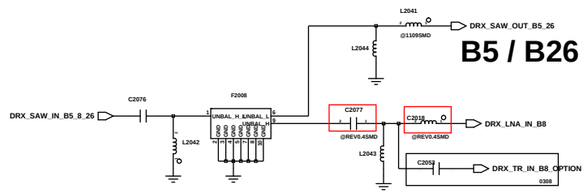


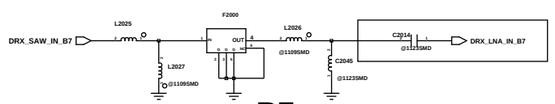


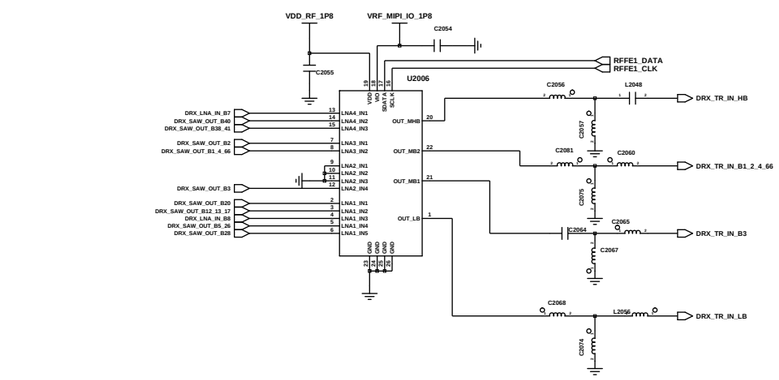


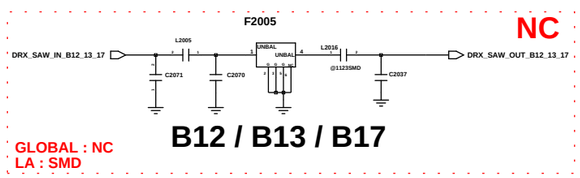


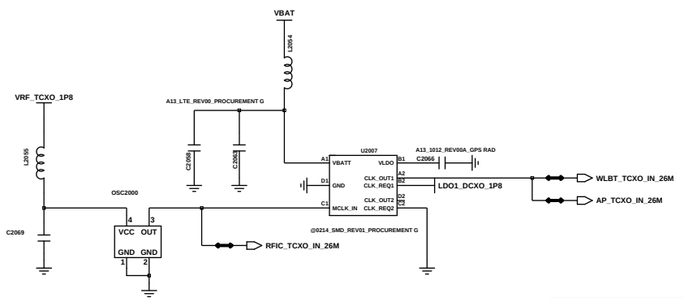


# DRX LNA BANK

# TRANSCEIVER

# 26MHz TCXO

| | | | | |
|---|---|---|---|---|
| Changed by: | Date Changed: | Time Changed: | QA CHK: | Drawing Number 2/7 |

Engineer
Drawn by:
R&D CHK:
DOC CTRL CHK:
MFG ENGR CHK:
TITLE:
Size

SAMSUNG CONFIDENTIAL
THIS DOCUMENT CONTAINS CONFIDENTIAL
PROPRIETARY INFORMATION THAT IS
SAMSUNG ELECTRONICS CO'S PROPERTY.
DO NOT DISCLOSE TO OR DUPLICATE FOR OTHERS
EXCEPT AS AUTHORIZED BY SAMSUNG.

# BT/WIFI

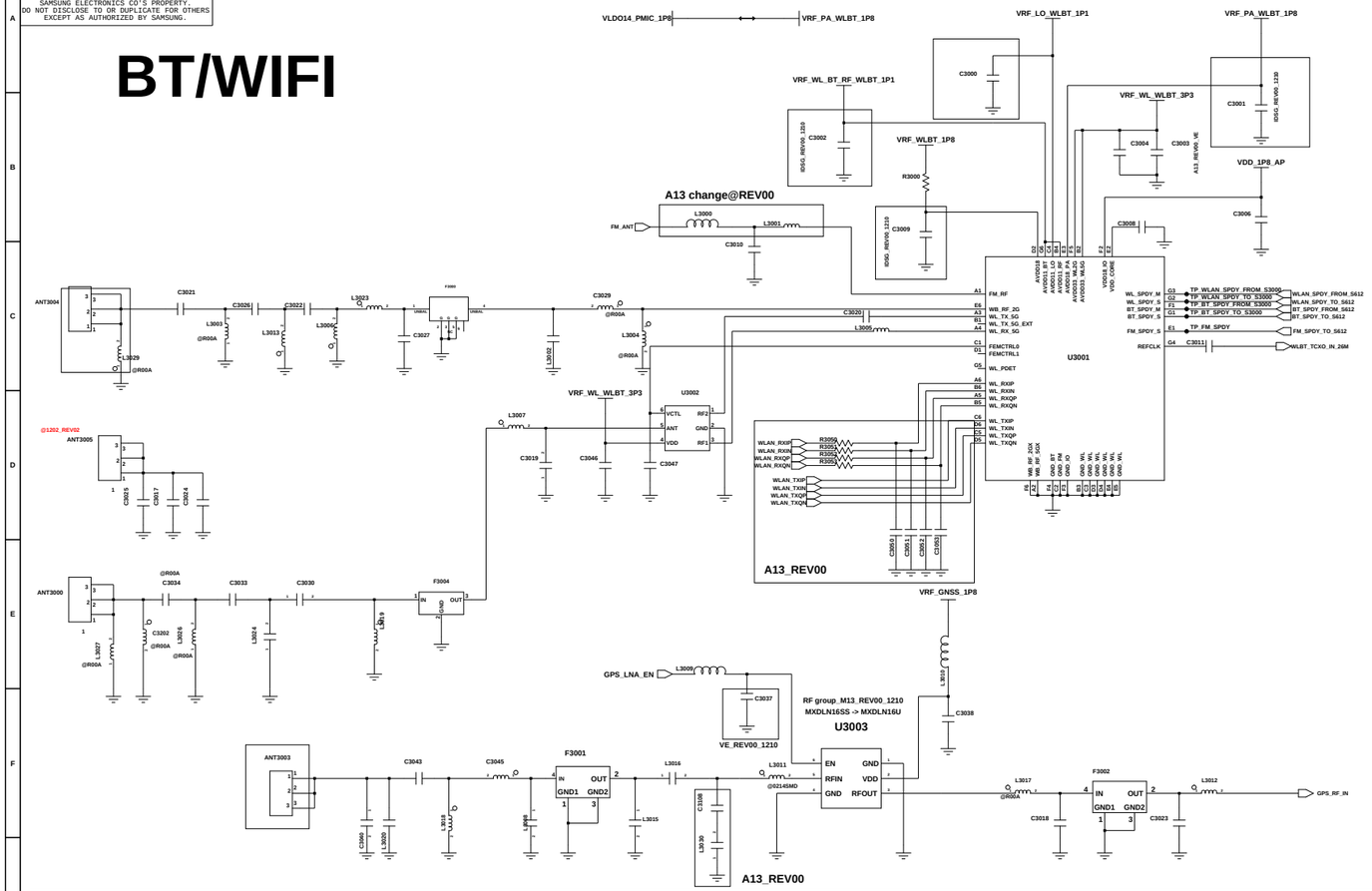


# NFC(Option)

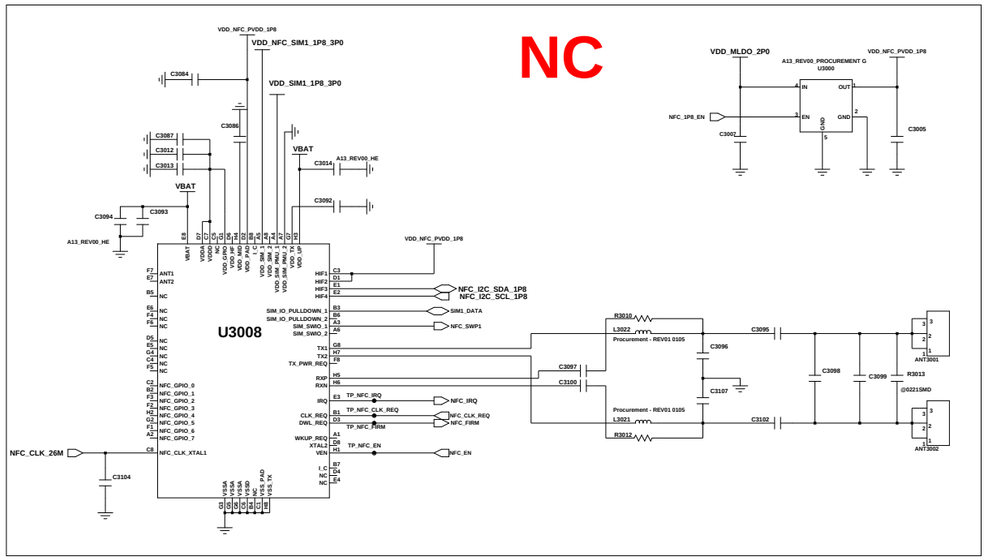


| NFC | NFC PART | Power supply of SIM1 | | NFC GPIO 14 | |
|---|---|---|---|---|---|
| | U3008 | R5017 | R5018 | R4005 | R4006 |
| NFC | CONNECT | short | open | 10K ohm | open |
| NON-NFC nonNFC | NC | open | short | open | 10K ohm |

# SENSORS

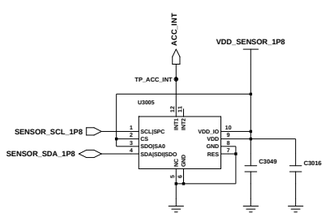


## ACC only

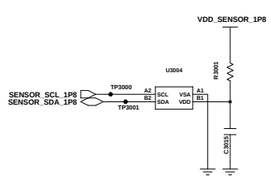


## MAGNETIC SENSOR

M13_REV00_PROCUREMENT G

GUARD CAP FOR MAGNETIC SENSOR

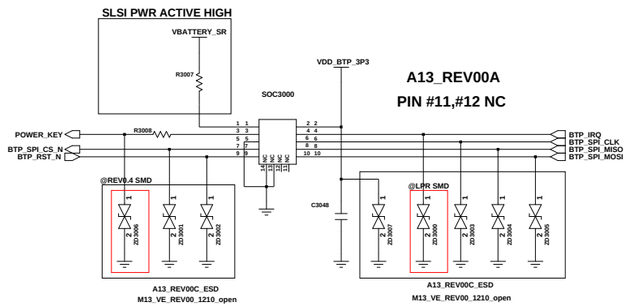


## FINGER PRINT SENSOR

| | |
|---|---|
| Engineer: | |
| Drawn by: | |
| R&D CHK: | TITLE: |
| DOC CTRL CHK: | |
| MFG ENGR CHK: | |

Size:

| Changed by: | Date Changed: | Time Changed: | QA CHK: | REV: | Drawing Number: | Page: |
|---|---|---|---|---|---|---|
| user93 | | | | | | 97 |

SAMSUNG CONFIDENTIAL
THIS DOCUMENT CONTAINS CONFIDENTIAL
AND PROPRIETARY INFORMATION OF
SAMSUNG ELECTRONICS CO'S PROPERTY.
DO NOT DISCLOSE TO OR DUPLICATE FOR OTHERS
EXCEPT AS AUTHORIZED BY SAMSUNG.

# EXYNOS3830 (NACHO)

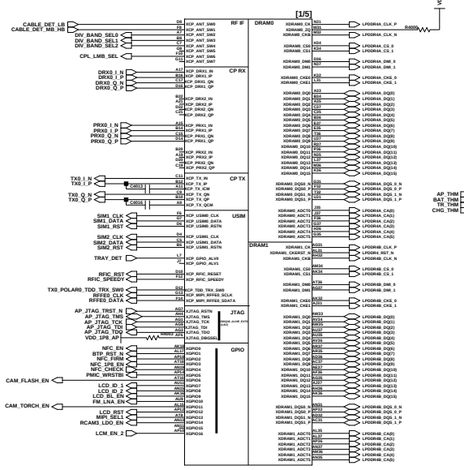


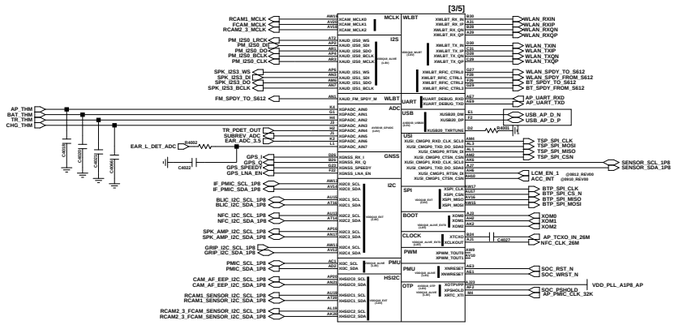


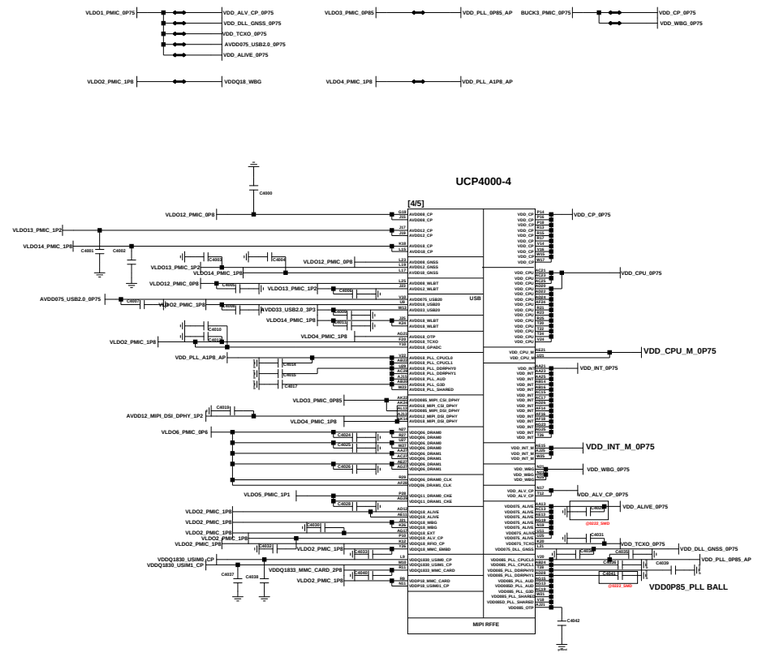


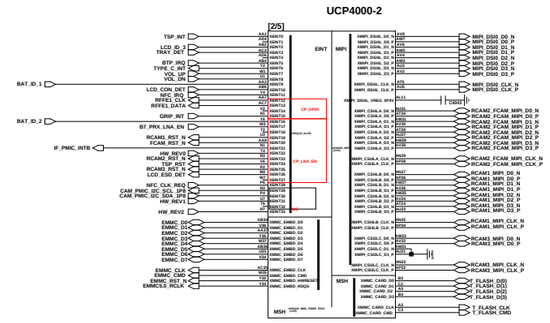


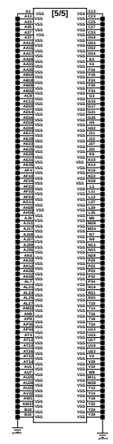


## COPY FROM R9

@1012_REV00A_CONN TO TP

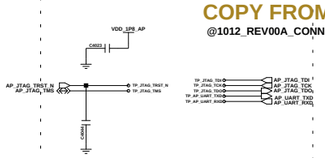


## AP JTAG

**BOOT option (need to update for Nacho)**

| OM[2:0] | 1st | 2nd |
|---|---|---|
| 000 | eMMC | USB |
| 001 | USB | - |
| 010 | SD CARD | USB |
| 011 | eMMC | SD CARD |

**H/W Revision Setting**

| MODEL | REV | HW_VER2 | HW_VER1 | HW_VER0 | |
|---|---|---|---|---|---|
| M13F/13 | 00 | 0 | 0 | 0 | BRING UP |
| M13F/13 | 01 | 0 | 0 | 1 | pre PV |
| M13F/13 | 02 | 0 | 1 | 0 | PV1 |
| M13F/13 | 03 / 04 | 0 | 1 | 1 | PV2 / PVR |
| | | 1 | 0 | 0 | |
| | | 1 | 0 | 1 | |
| | | 1 | 1 | 0 | |
| | | 1 | 1 | 1 | |

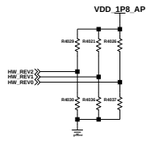


## PCB JTAG

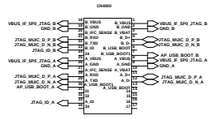


## NFC OPTION

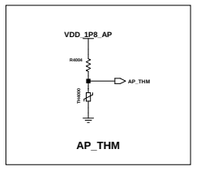


AP_THM

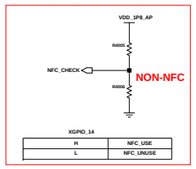


XGPIO_14

| | |
|---|---|
| H | NFC_USE |
| L | NFC_UNUSE |

## I2C Pull-up Register

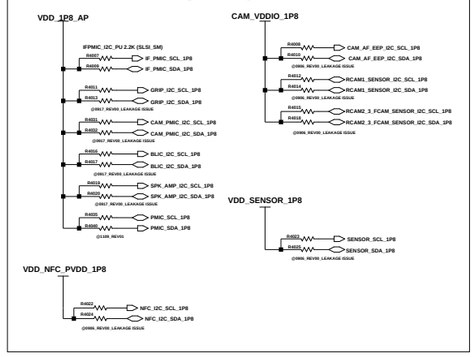


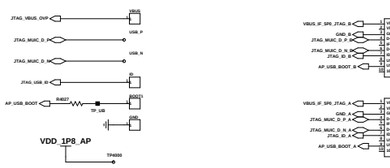


## AP Decap

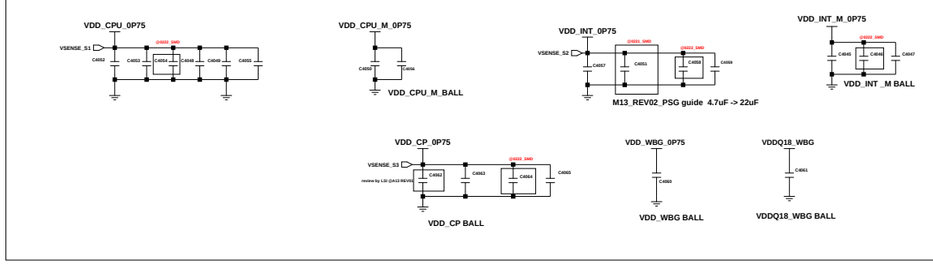


| | | | | | | | | | | | | | | | | | | | | | | | |
|---|---|---|---|---|---|---|---|---|---|---|---|---|---|---|---|---|---|---|---|---|---|---|---|
| Changed by | Date Changed | Time Changed | Engineer: | | | | | | | | | | | | | | | | | | | | |
| | | | Schematic Ver: | | | | | | | | | | | | | | | | | | | | |
| | | | PCB Ver: | | | | | | | | | | | | | | | | | | | | |
| | | | DOC CTRL Ver: | | | | | | | | | | | | | | | | | | | | |
| | | | MFG DOCS Ver: | | | | | | | | | | | | | | | | | | | | |
| | | | QA Ver: | | | | | | | | | | | | | | | | | | | | |

TITLE:

SIZE | Drawing Number: | Page: 07

SAMSUNG CONFIDENTIAL
THIS DOCUMENT CONTAINS CONFIDENTIAL
AND PROPRIETARY INFORMATION OF
SAMSUNG ELECTRONICS CO'S PROPERTY.
DO NOT DISCLOSE TO OR DUPLICATE FOR OTHERS
EXCEPT AS AUTHORIZED BY SAMSUNG.

# MAIN_PMIC

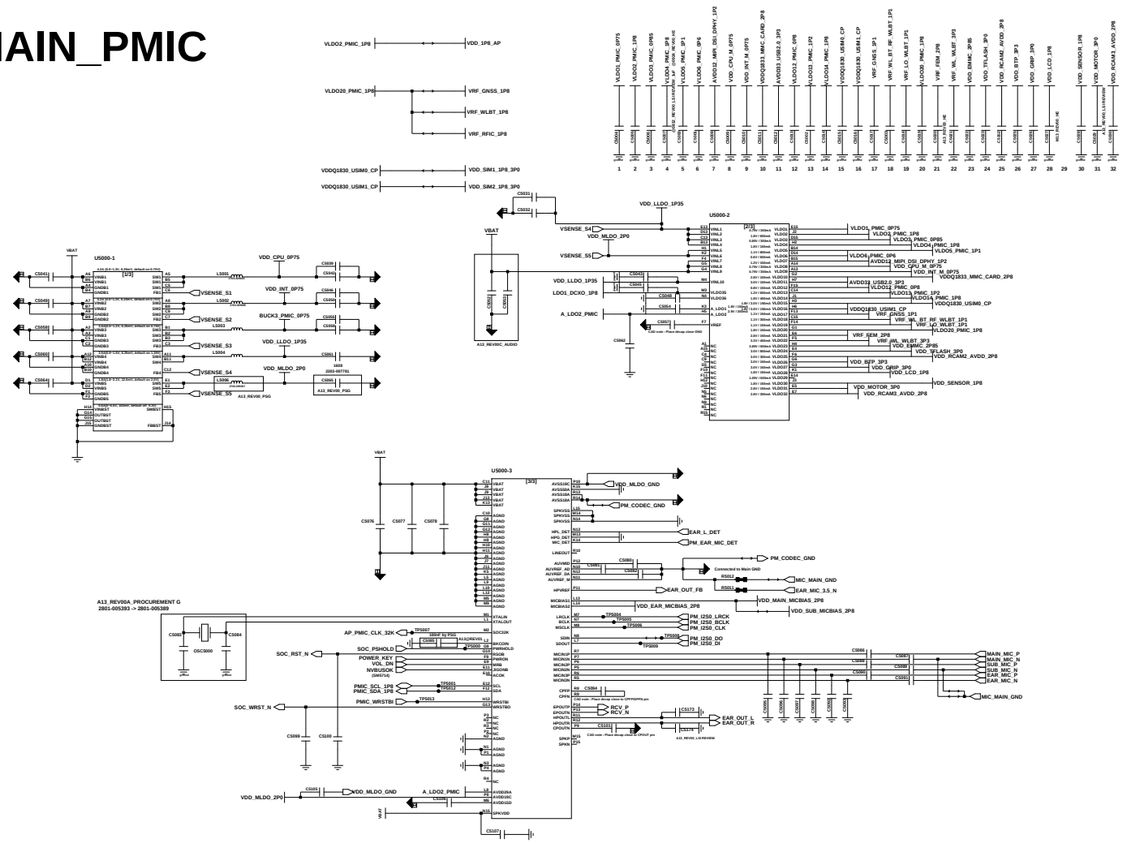


# IF PMIC SM5714

COPY FROM SM-A536B

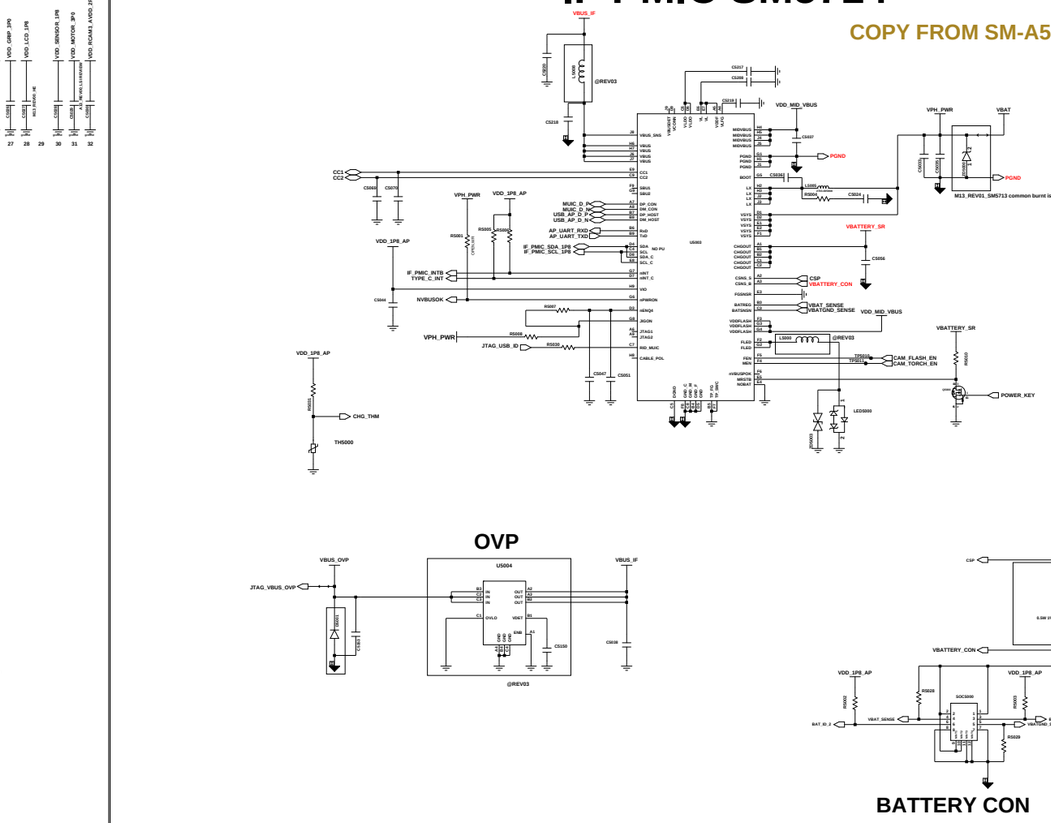


## OVP




## BATTERY CON

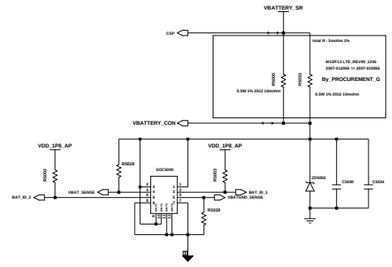


# SIM & SD CARD (3IN3)

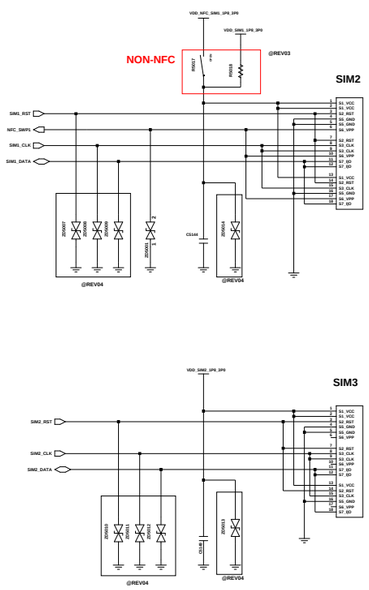


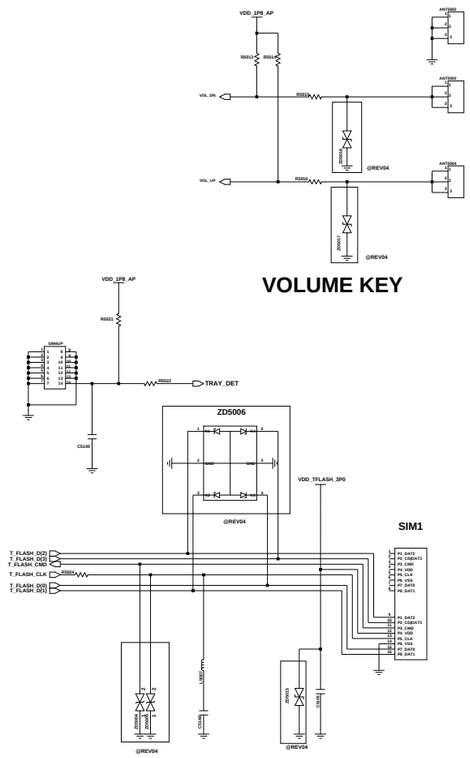


# eMCP

| | | |
|---|---|---|
| 3 + 32 | 1108-000678 | |
| 4 + 64 | 1108-000725 | default |
| 4 + 128 | 1108-000717 | |
| 6 + 128 | 1108-000716 | |

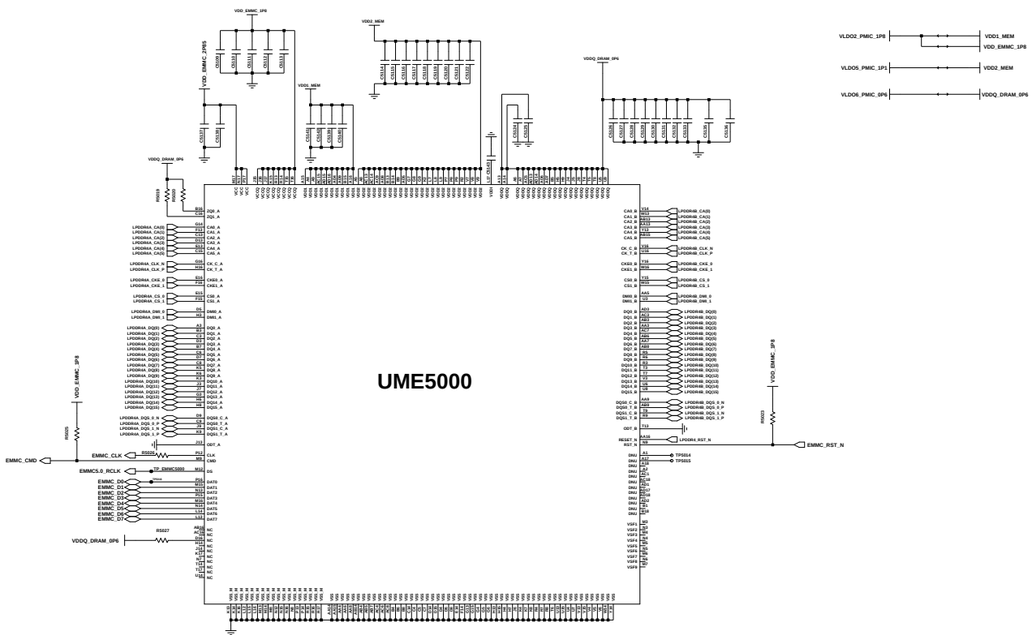


| | | | | | | | | | | | | | | |
|---|---|---|---|---|---|---|---|---|---|---|---|---|---|---|
| Engineer: | | | | | | | | | | | | | | |
| Drawn by: | | | | | | | | | | | | | | |
| R&D CHK: | | | | | | | | | | | | TITLE: | | Size: |
| DOC CTRL CHK: | | | | | | | | | | | | | | |
| MFG ENGR CHK: | | | | | | | | | | | | | | |
| Changed by: | Date Changed: | Time Changed: | Q4 CHK: | | | | | | | | | REV: | Drawing Number: | Page:1p1 |

SAMSUNG CONFIDENTIAL
THIS DOCUMENT CONTAINS CONFIDENTIAL
PROPRIETARY INFORMATION THAT IS
SAMSUNG ELECTRONICS CO'S PROPERTY.
DO NOT DISCLOSE TO OR DUPLICATE FOR OTHERS
EXCEPT AS AUTHORIZED BY SAMSUNG.

# BLIC

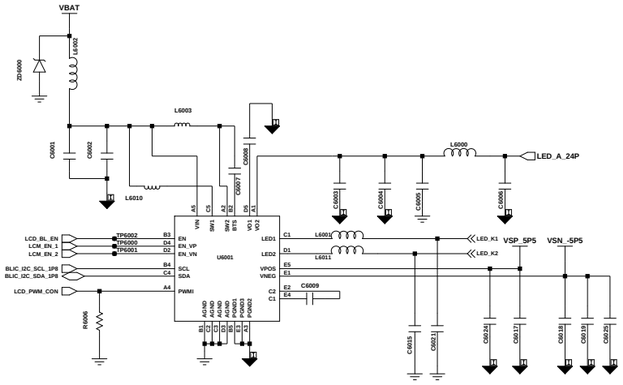


**LCD_BL_IC**
**copy from A235F**

# MAIN FPCB_PART (78pin) 6.58" FHD+ TFT V-CUT

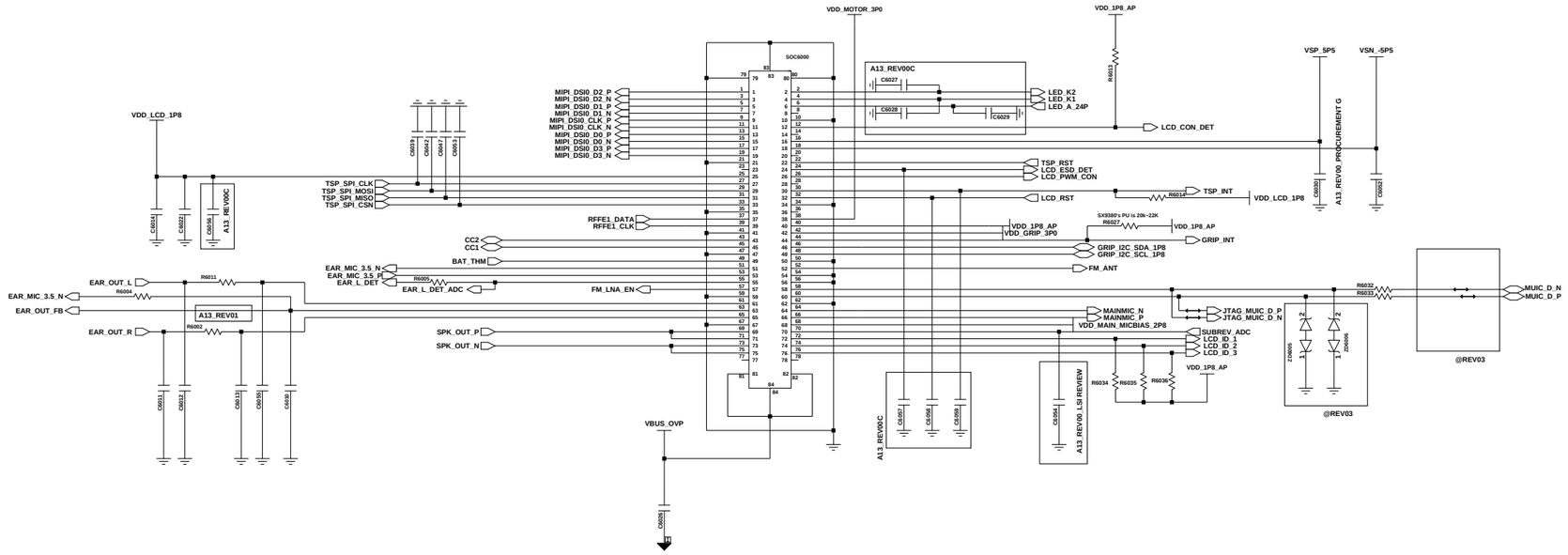


# AUDIO_PART

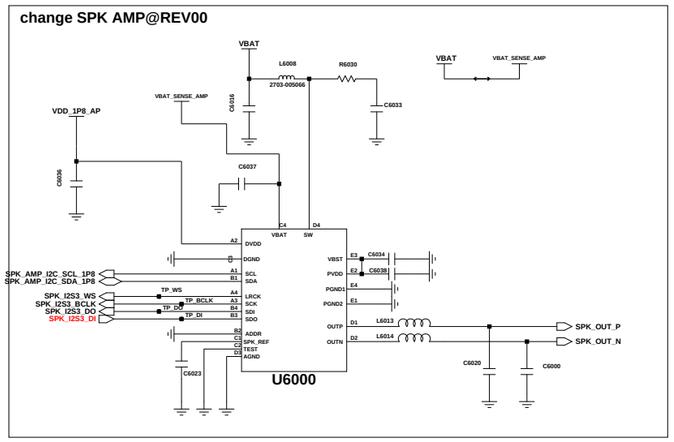


**SPK AMP**
**copy from A127FF**

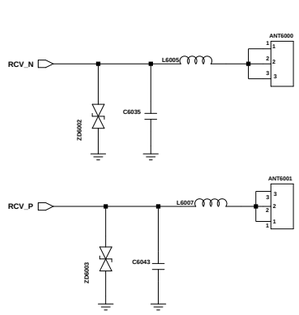


**RCV CONTACT**

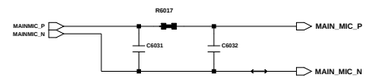


**MAIN MIC**

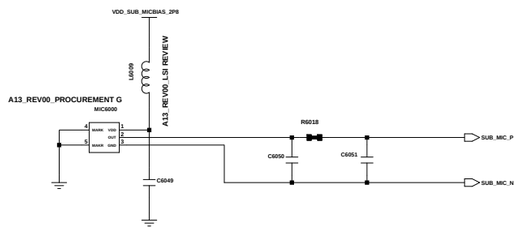


**Sub MIC**

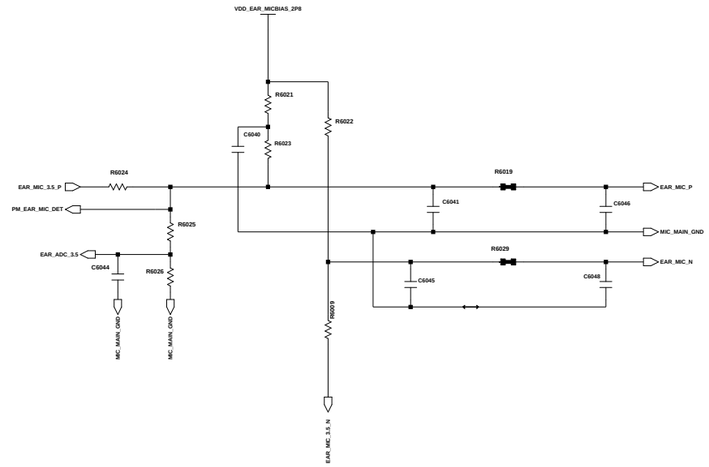


**Ear MIC**

| | | | |
|---|---|---|---|
| Engineer: | | | |
| Drawn by: | | | |
| R&D CHK: | TITLE: | | Size: |
| DOC CTRL CHK: | | | |
| MFG ENGR CHK: | | | |
| QA CHK: | REV | Drawing Number: | Page:6/7 |

| Changed by: | Date Changed: | Time Changed: |
|---|---|---|
| | | |

SAMSUNG CONFIDENTIAL
THIS DOCUMENT CONTAINS CONFIDENTIAL PROPRIETARY INFORMATION THAT IS SAMSUNG ELECTRONICS CO'S PROPERTY. DO NOT DISCLOSE TO OR DUPLICATE FOR OTHERS EXCEPT AS AUTHORIZED BY SAMSUNG.

# CAMERA

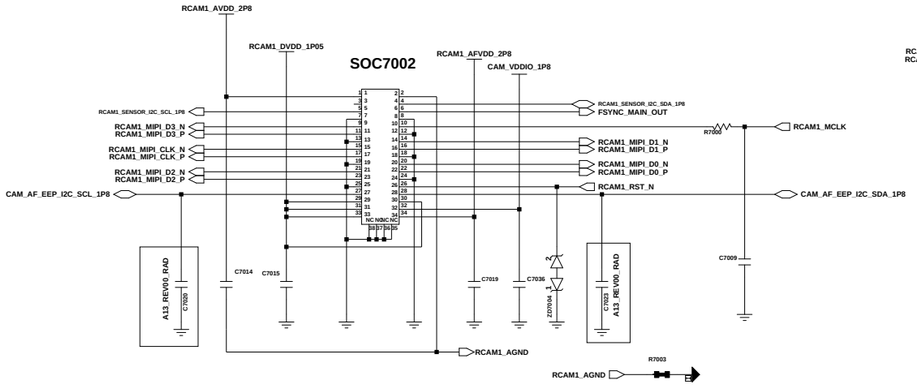


## RCAM1_50M(34PIN)_S5KJN1

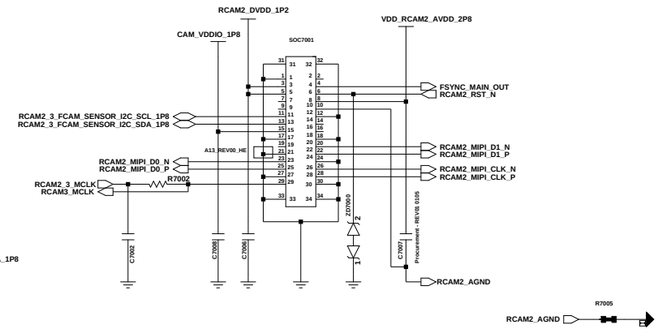


## RCAM2_5M_UW (30pin)_GC5035

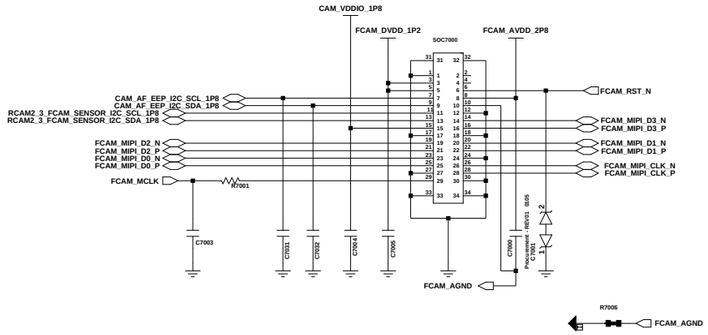


## FRONT_8M FF (30PIN)_GC08A3

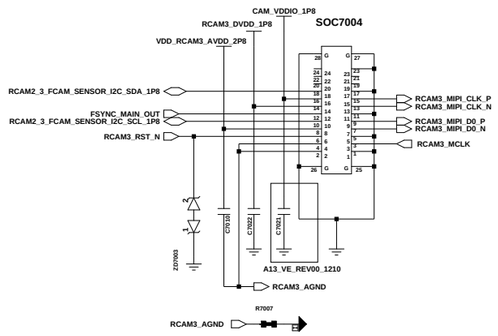


## RCAM3_2M_BOKEH (24PIN)_GC02M1B

# CAMERA MIPI SWITCH

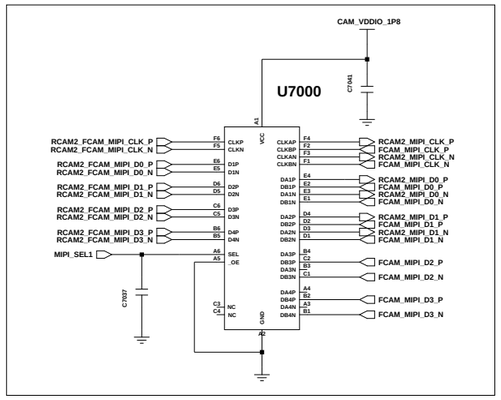


# CAM PMIC

A13_REV00

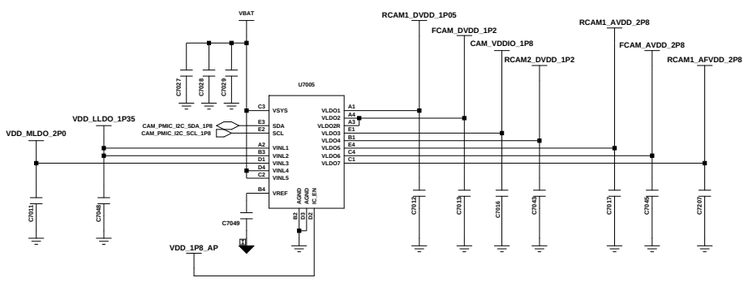


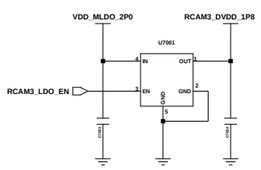


## SHIELD CAN

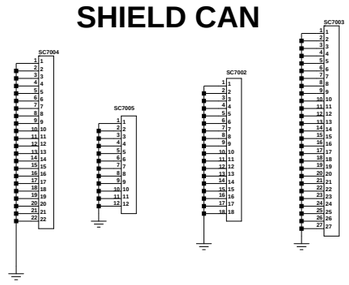

## LCD SUS Contact, 3.3t

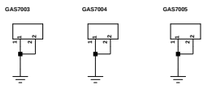


## 2D BARCODE

## SWA_4GB+64GB

### REGION

- GLOBAL_NFC(A) R7020 NC
- GLOBAL_NONNFC(B) R7021 NC
- LA_M135M(M) R7022
- SWA_E135F(E) R7023 NC

### MEMORY

- 3+32 R7030 NC
- 4+64 R7031
- 4+128 R7032 NC
- 6+128 R7033 NC

## BOSS HOLE

| | | | |
|---|---|---|---|
| Engineer: | SM-M135F | | |
| Drawn by: | | | |
| R&D CHK: | TITLE: | Size: | |
| DOC CTRL CHK: | CAMERA | | |
| MFG ENGR CHK: | | | |

| Changed by: | Date Changed: | Time Changed: | QA CHK: | REV | Drawing Number: | Page: |
|---|---|---|---|---|---|---|
| | | | | | | 7/8 |

Revision :
Manufacture Count :
Charge :
Contact :
Date :
Routing :
Resin :

VX_SETUP(2022-02-11)_HHP

Created date of PCB data : 2022/5/ 4 09:31:15

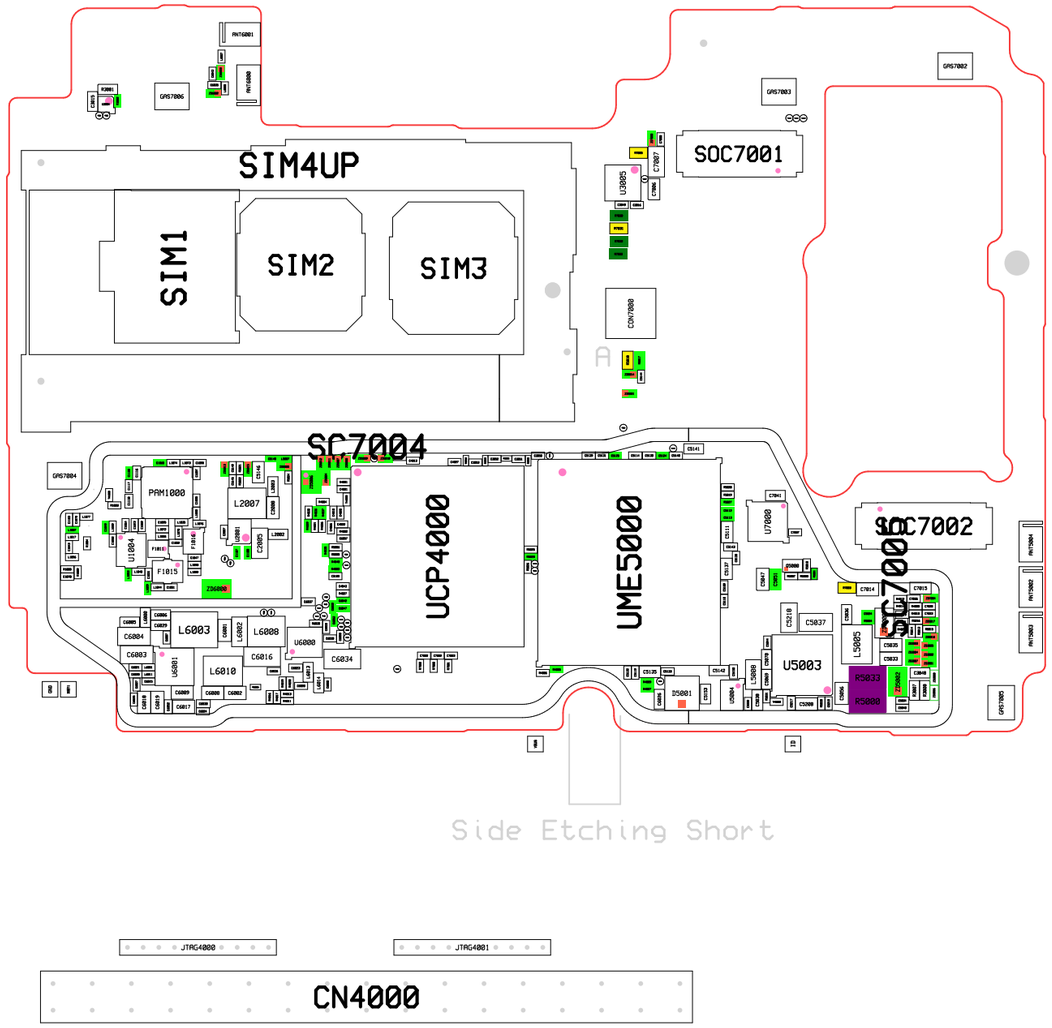


LFL15869MTC1B787(F1006) : IT'S Wr
ong Polarity possibility. Check th
e Pin1
2007-010856(R5000, R5033) : Check!
Bottom Surface of Component

Model :
Revision :
Manufacture Count :
Charge :
Contact :
Date :
Routing :
Resin :

VX_SETUP(2022-02-11)_HHP
Created date of PCB data : 2022/5/ 4 09:31:15

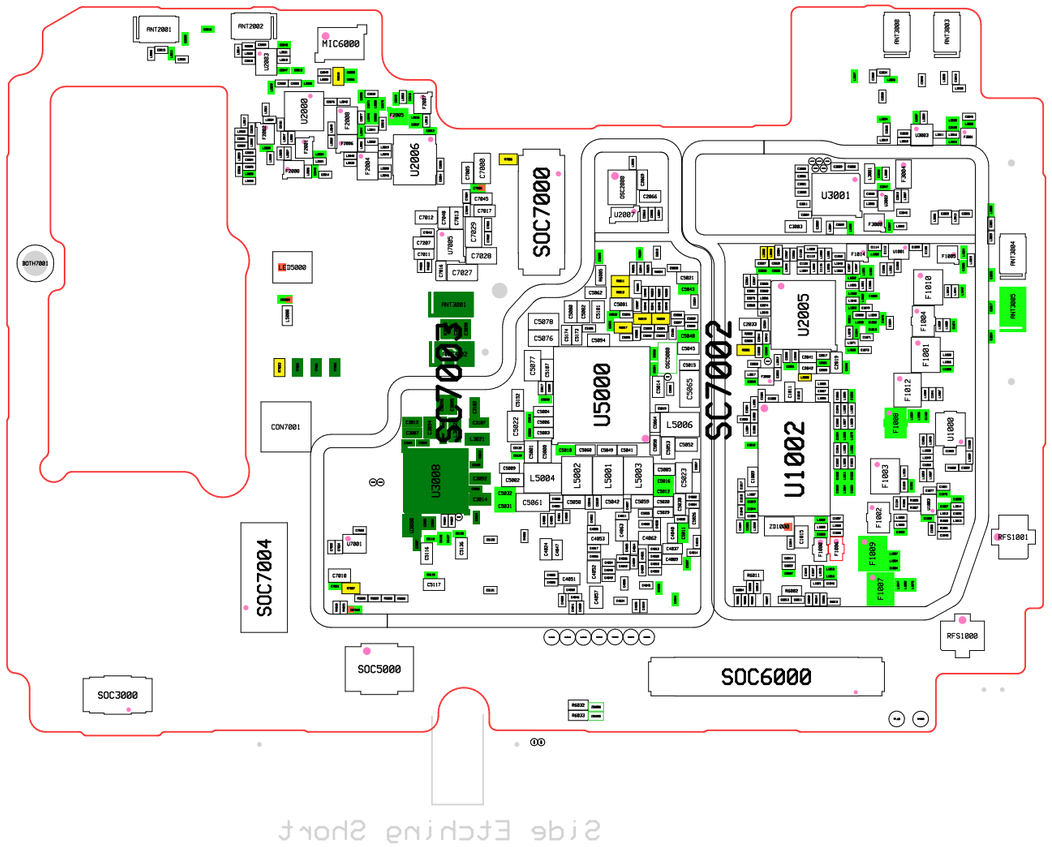


LFL15869MTC1B787(F1006) : IT'S Wr
ong Polarity possibility. Check th
e Pin1
2007-010856(R5000, R5033) : Check!
Bottom Surface of Component

SAMSUNG CONFIDENTIAL
THIS DOCUMENT CONTAINS CONFIDENTIAL
AND PROPRIETARY INFORMATION OF
SAMSUNG ELECTRONICS CO'S PROPERTY.
DO NOT DISCLOSE TO OR DUPLICATE FOR OTHERS
EXCEPT AS AUTHORIZED BY SAMSUNG.

# SM-M135F/_SUB_REV04_0407

## MAIN ANTENNA1 (LB)

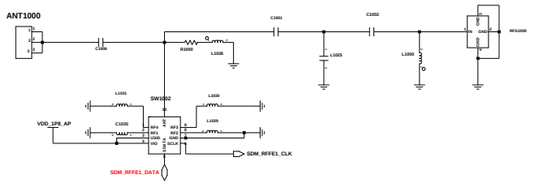


## MAIN ANTENNA1 (X-GND)

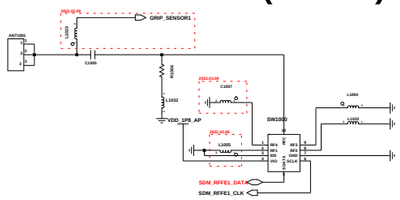


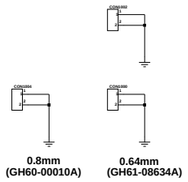


## CABLE CLIP

## MAIN FPCB

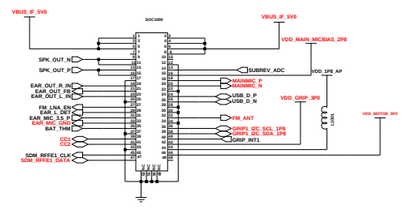


## SUB REV

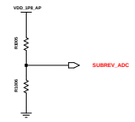


## BAT_THM

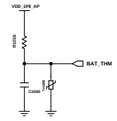


## MOTOR

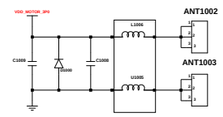


## MAIN ANTENNA2 (MB, HB)

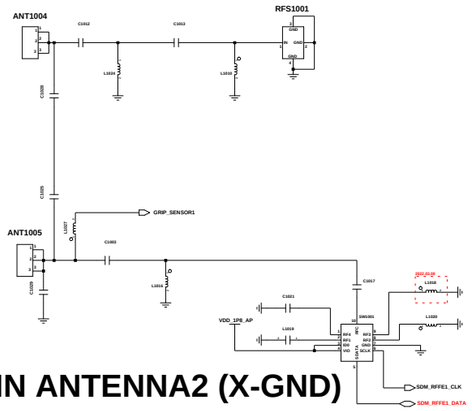


## MAIN ANTENNA2 (X-GND)

## EARJACK

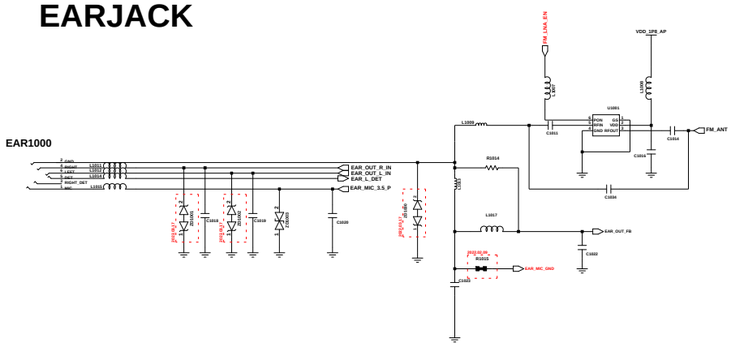


## IF CONN

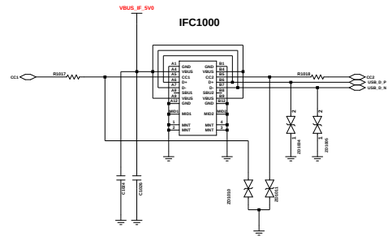


## GRIP SENSOR1

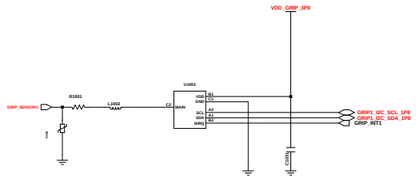


## SPK

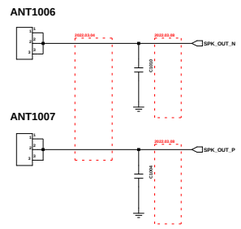


## MIC

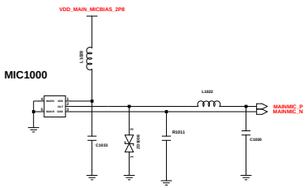


## GASKET

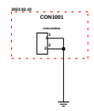


3.3T : LCD SUS Contact

## BOSS HOLE




## INSIK MARK

| | |
|---|---|
| Engineer: | |
| Drawn by: | |
| R&D CHK: | |
| DOC CTRL CHK: | |
| MFG ENGR CHK: | |
| QA CHK: | |
| TITLE: | A13_LTE_Sub_Rev02C |
| Size: | |
| REV: | |
| Drawing Number: | |
| Page: | |

Changed by: | Date Changed: | Time Changed:

VX_Setup(2022-02-08)_HHP_TEST2

Created date of PCB data : 2022/4/ 8 17:01:19

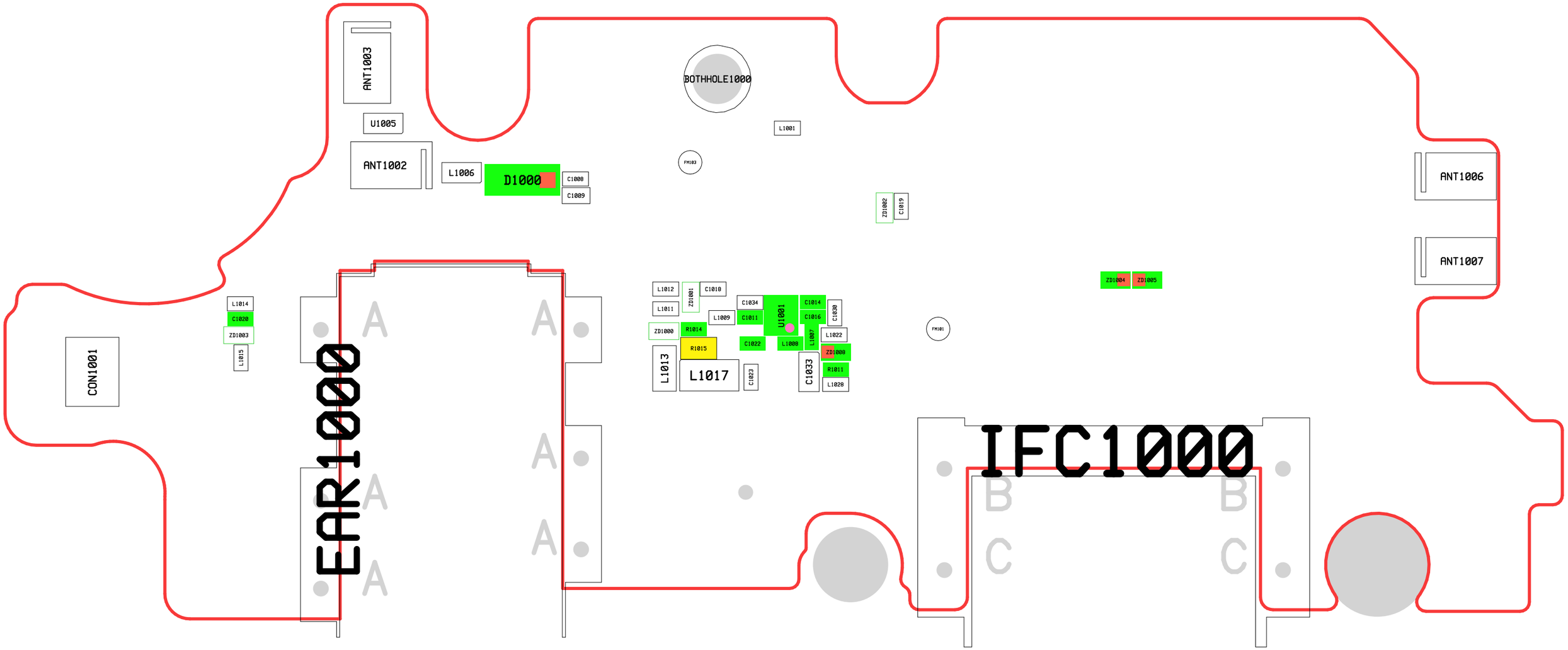

VX_Setup(2022-02-08)_HHP_TEST2
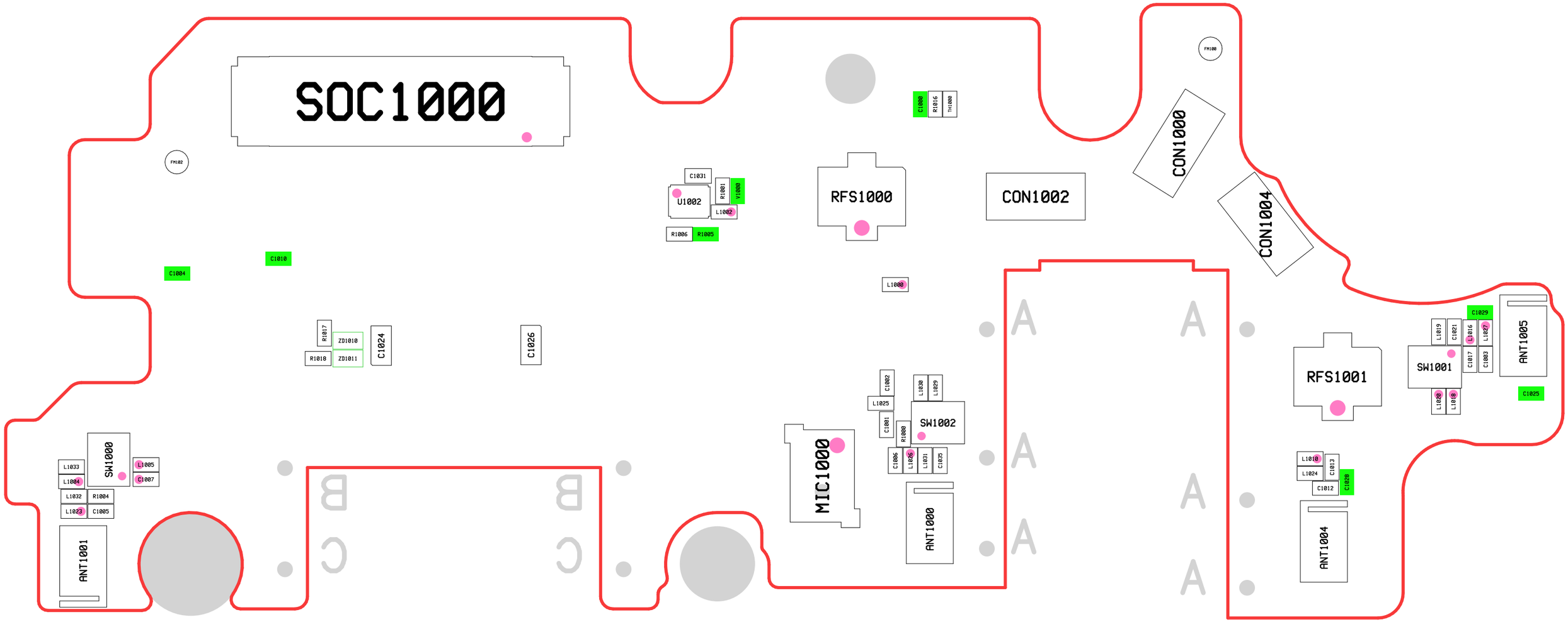
Created date of PCB data : 2022/4/ 8 17:01:19